Hydrant Outdoor Lamp Box

HOL SERIES

Type of Explosion-Proof
Flameproof (Ex d IIB+H2 T6)

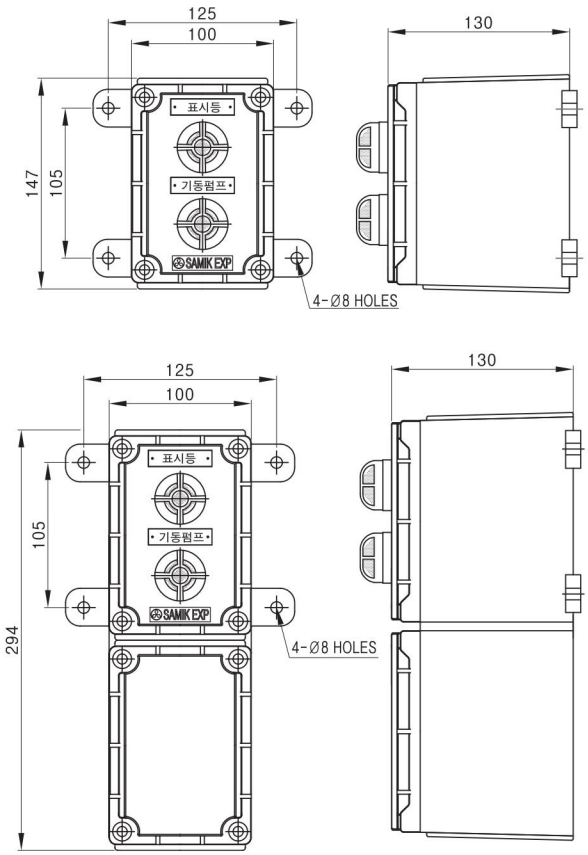

Standard Materials

- **Body** : Cast aluminium alloy
- **Cover** : Cast aluminium alloy
- **Bolt & Washer** : Stainless Steel

Technical Data

- **Rated Voltage** : AC 110V,220V / DC12V,24V

Standard Finish

- MUNSELL No. 7.5R 3/12
- If you want another color, contact us please.

Compliance & Certification

- IEC 60079-0,1
- Notification of Ministry of Labor No.2010-36
- Certified by KOSHA
  (Korea Occupational Safety & Health Agency),
  KGS (Korea Gas Satety Corporation),
  and the others.